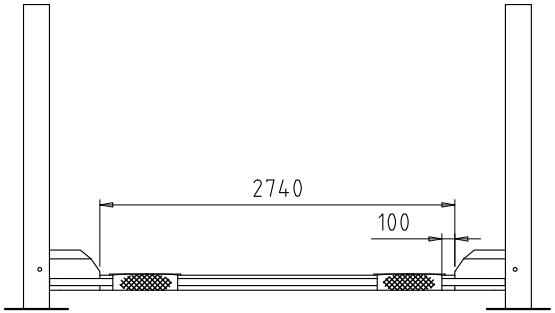

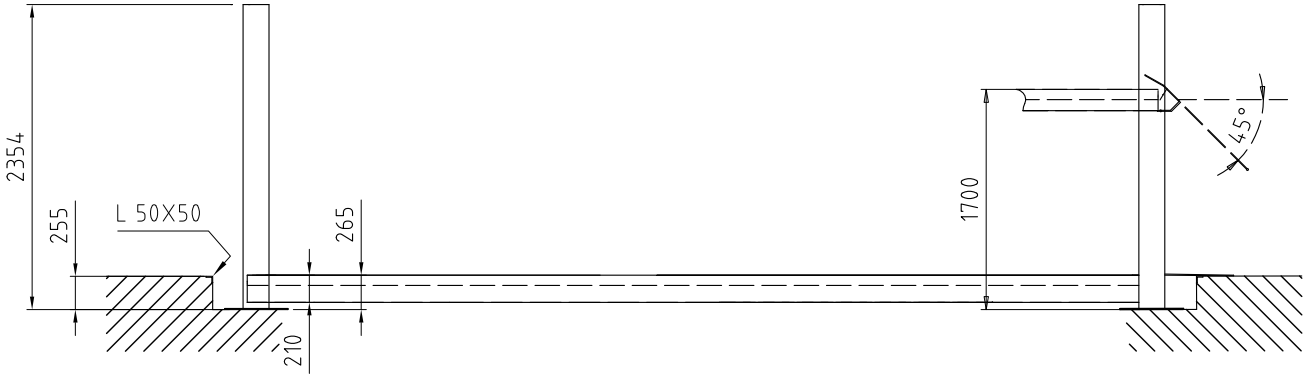

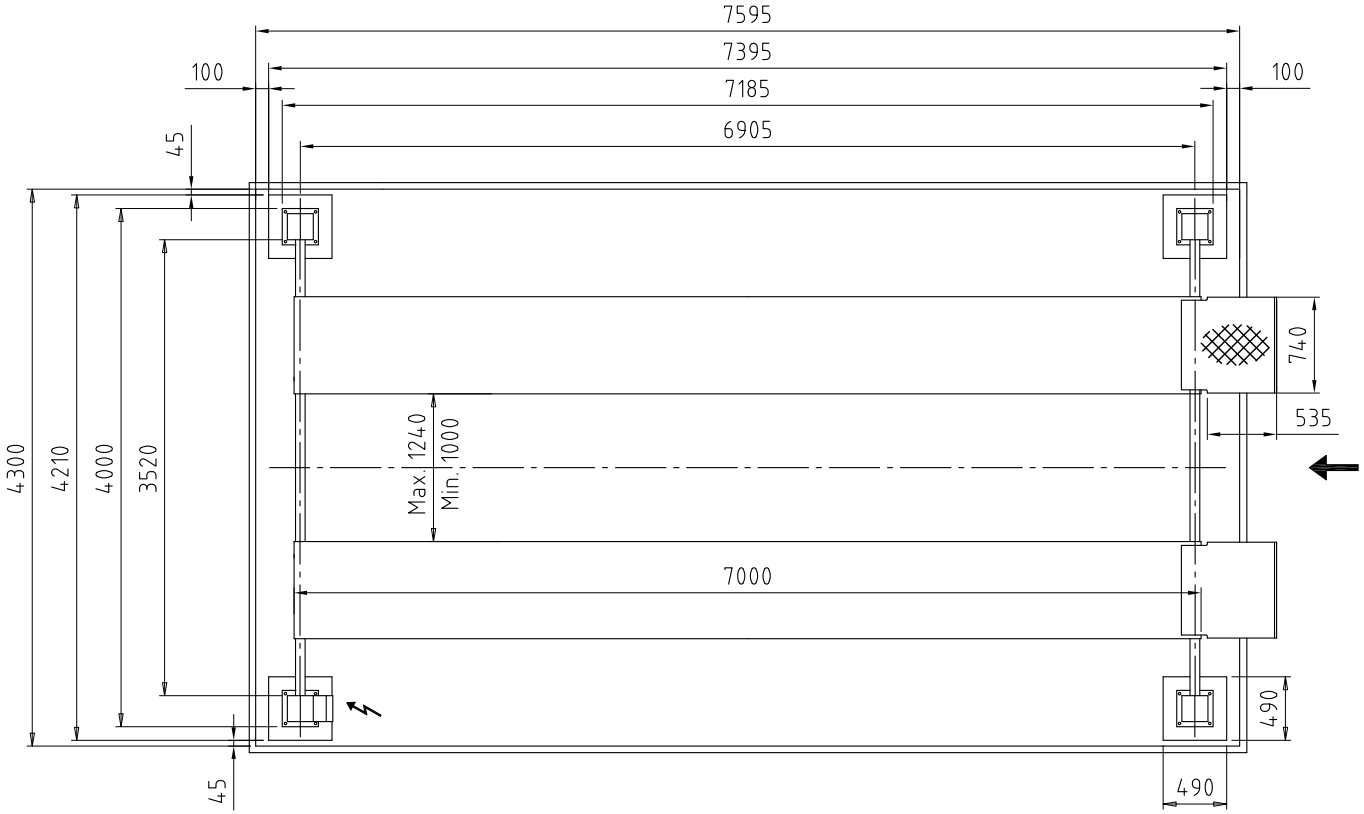

Date: 060215	Sign. LJE	Scale: 1:40	No. T12131
UPLIFTING COMPANY **AUTOP STENHOJ**			Maxi 100 3,52 x 7 (recessed) Rev. date: