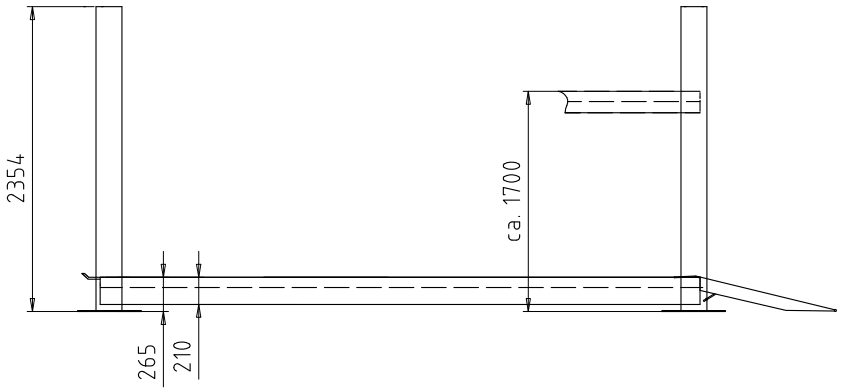

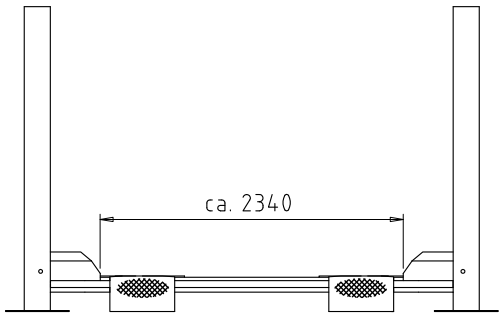

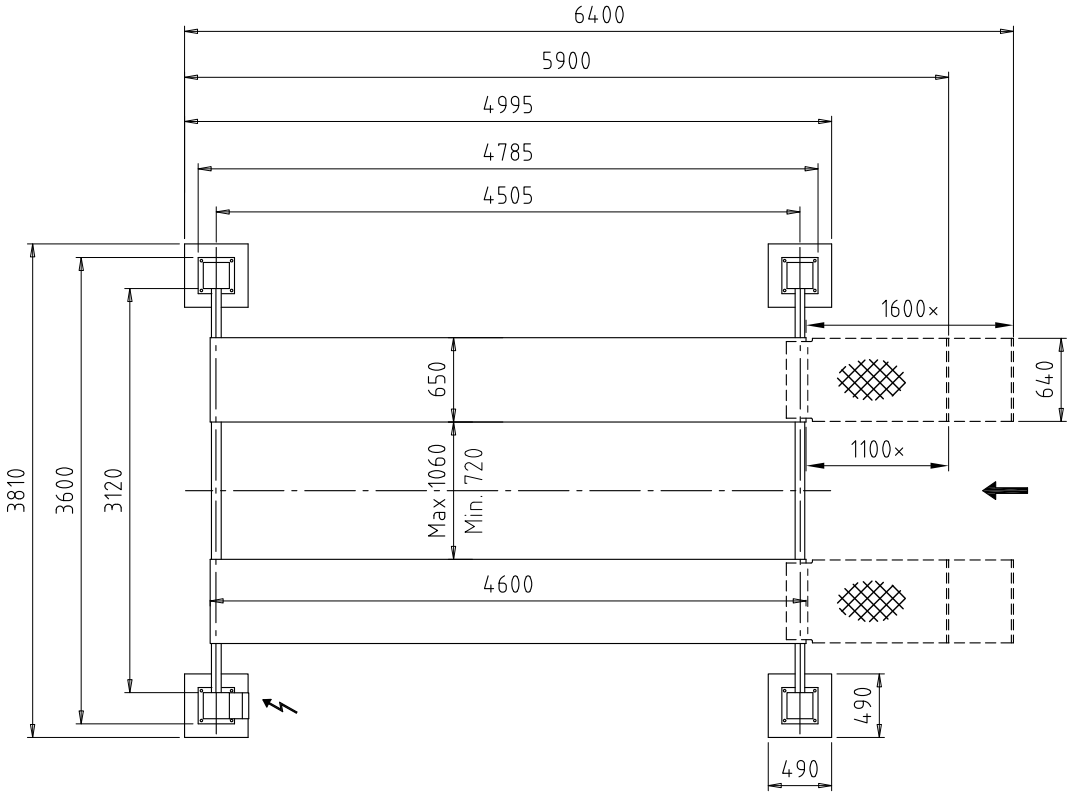

×) Optional

Date: 030613	Sign. KDA/lje	Scale: 1:40	No. T11590
UPLIFTING COMPANY **AUTOP STENHOJ**			Maxi 100 for fork lifts (3,12 x 4,6) Rev. date: 011014