Date: 100610	Sign. KDA	Scale: 1:40	No. T11418
UPLIFTING COMPANY **AUTOP STENHOJ**			Major 4026-47W (4000 kg) Rev. date: 060514
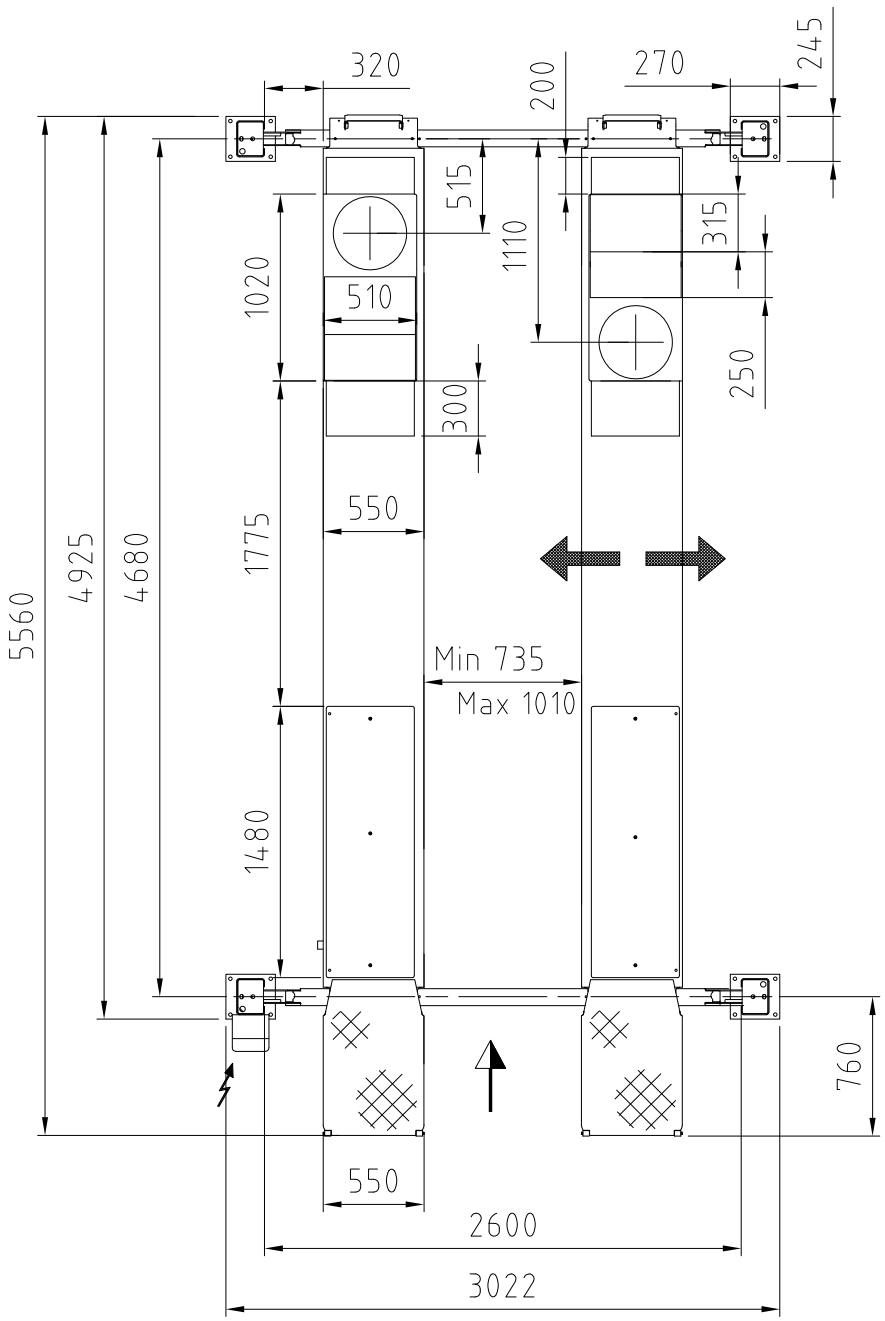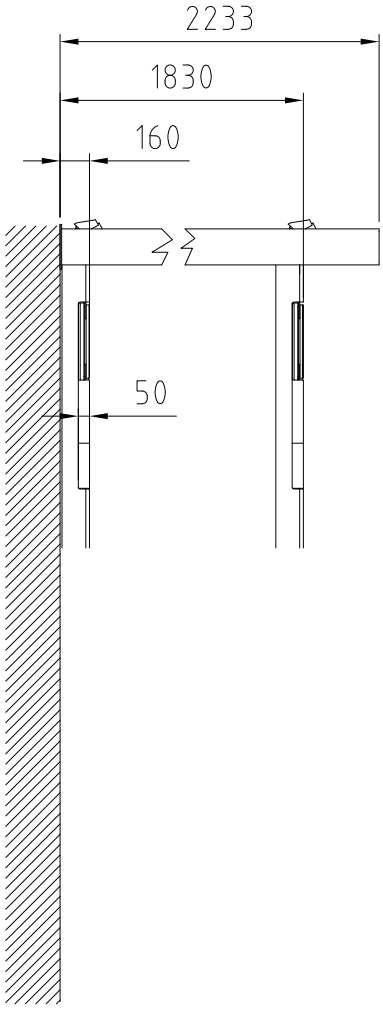
Note! Turn tables are not included in the delivery. Must be purchased locally.