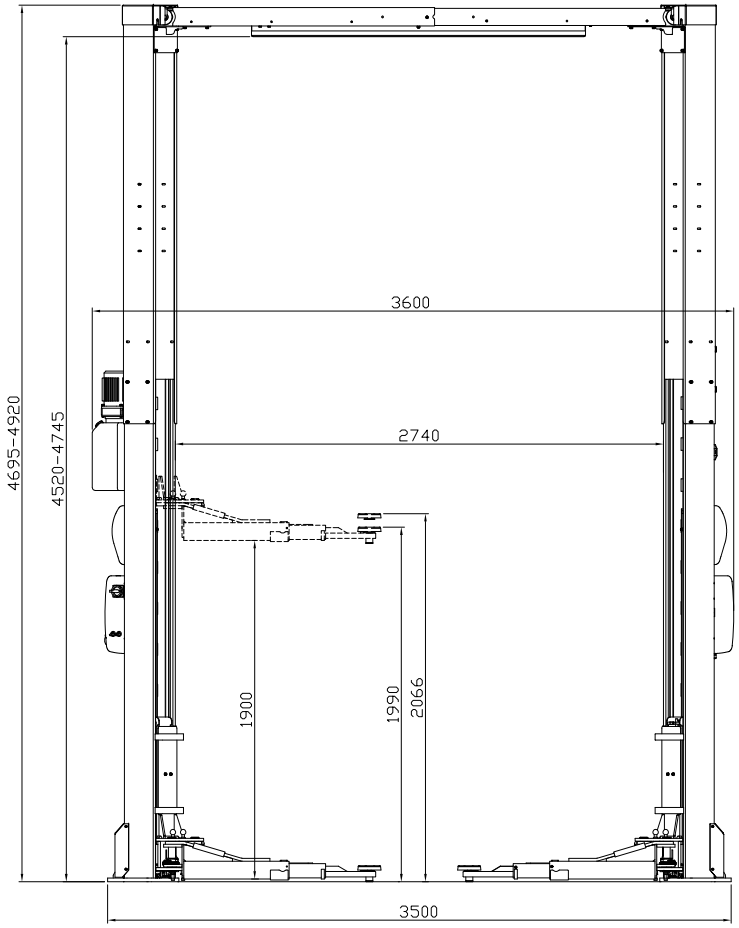

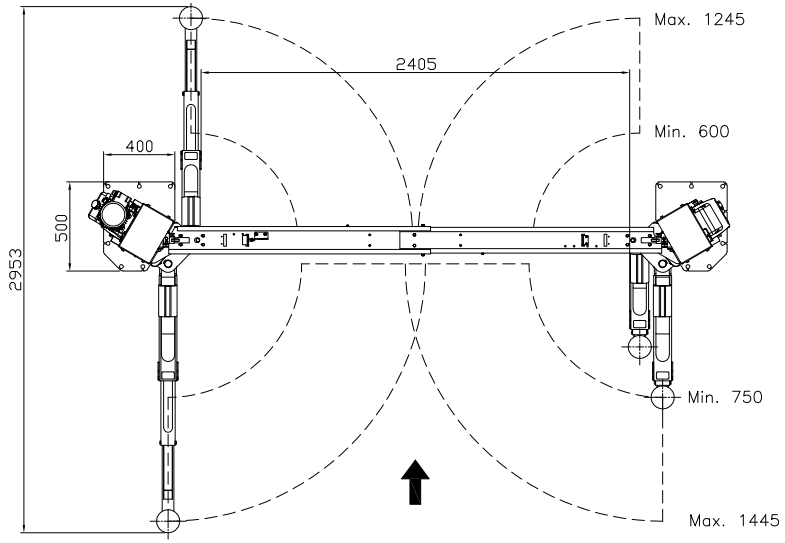

Short arm

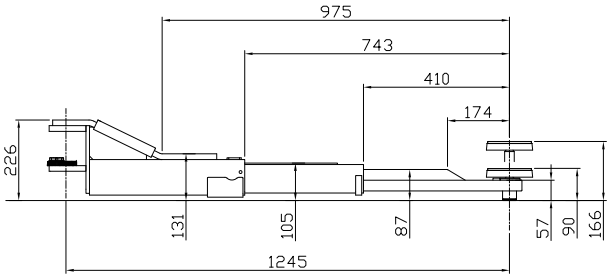

Long arm

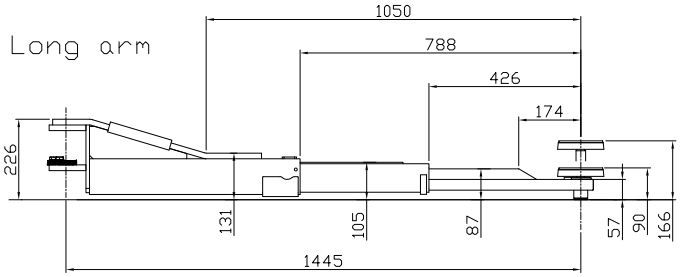

Date: 160226	Sign. LJE	Scale: 1:30	No. T12575

UPLIFTING COMPANY

AUTOP STENHOJ

Mascot 40 H F
DT/DT Ø50
w/extra control unit
+ 700mm