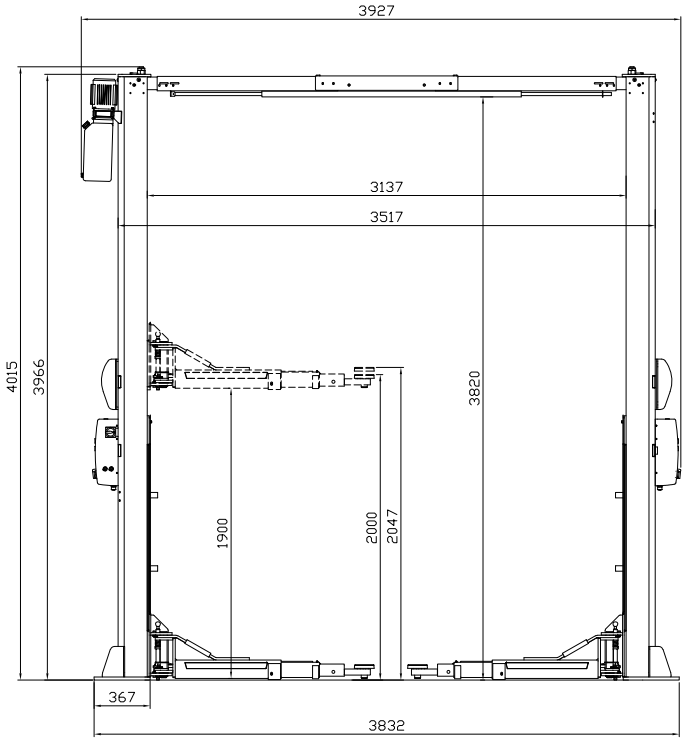

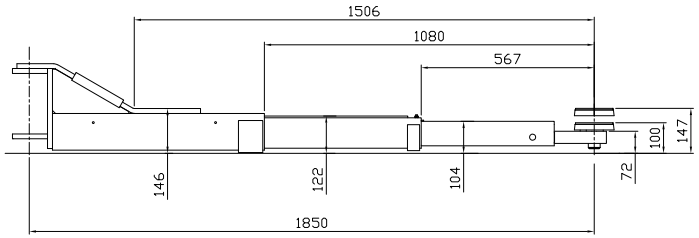

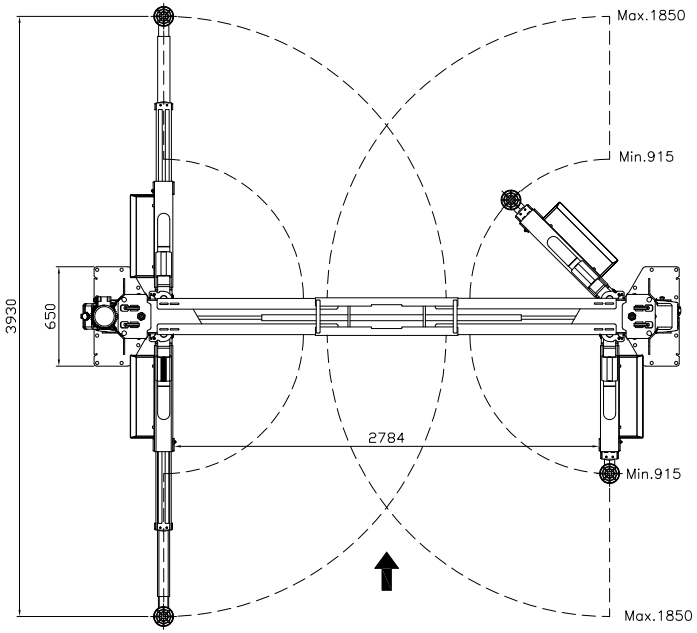

Date: 090724	Sign. LJE	Scale: 1:35	No. T12548
UPLIFTING COMPANY AUTOP STENHOJ			Mascot 55 H F DT/DT Ø50 w/extra control unit Rev. date: