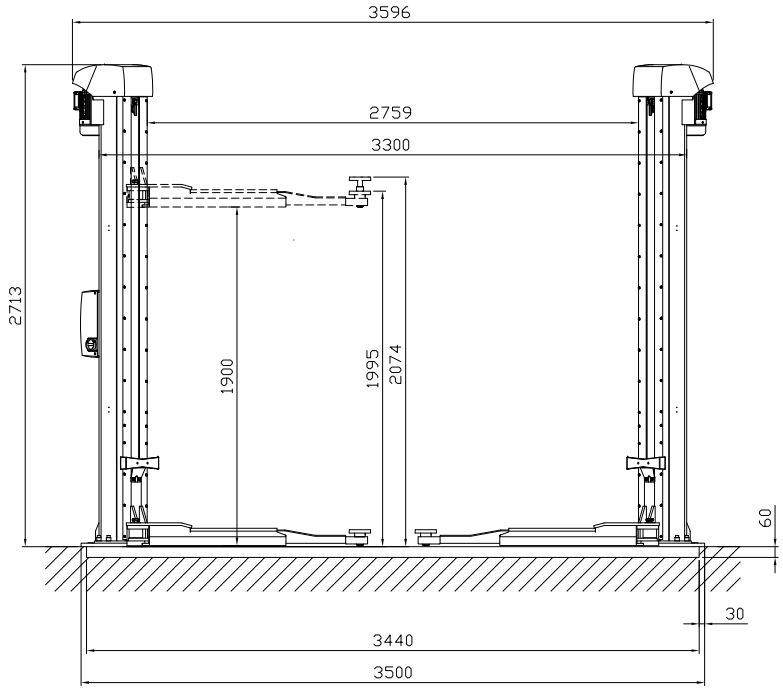

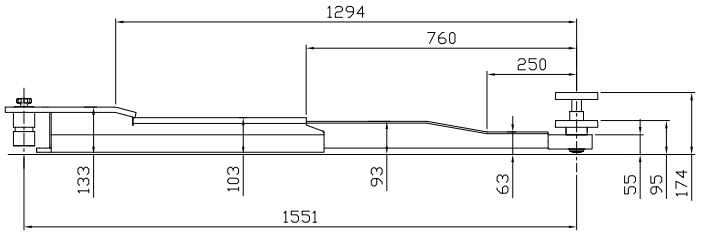

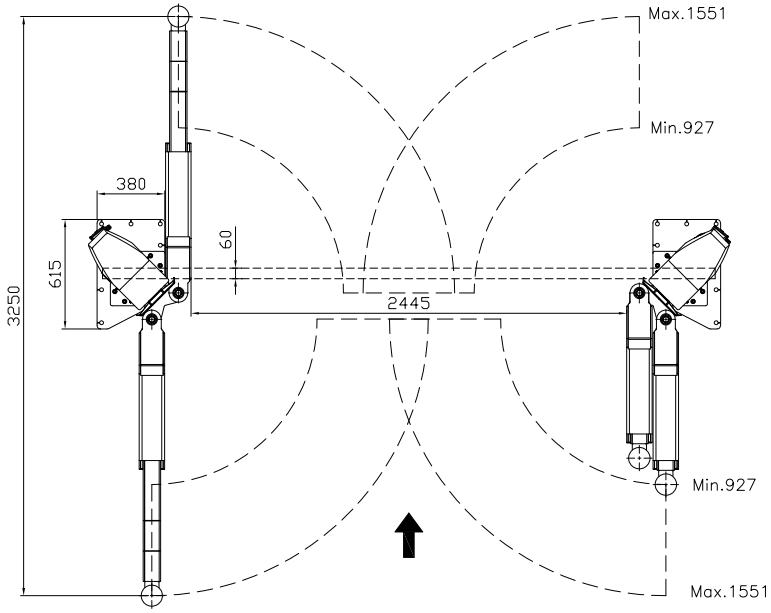

Date: 170124	Sign. LJE	Scale: 1:35	No. T12531
UPLIFTING COMPANY AUTOP STENHOJ			Maestro 2.35 NxT F ST/ST (U) Ø50 Rev. date: