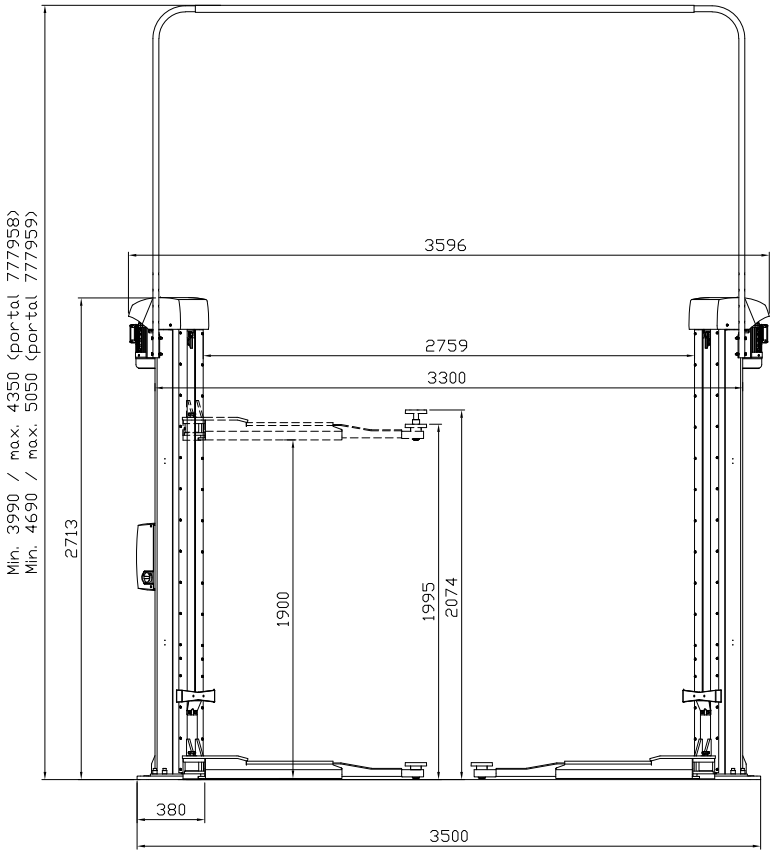

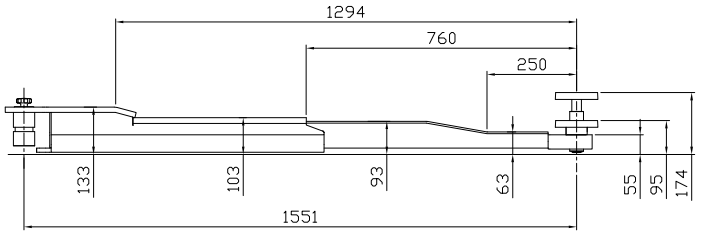

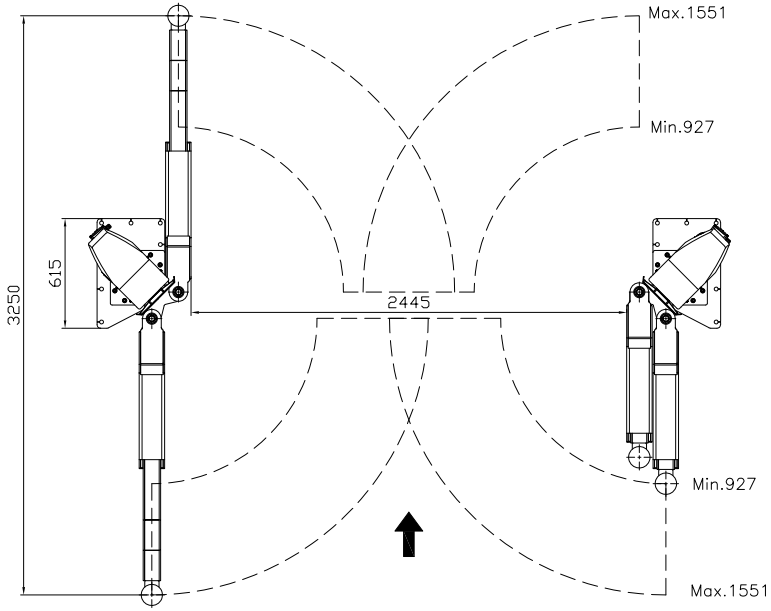

Date: 170124	Sign. LJE	Scale: 1:35	No. T12530
UPLIFTING COMPANY AUTOP STENHOJ			Maestro 2.35 NxT F ST/ST (P) Ø50 Rev. date: