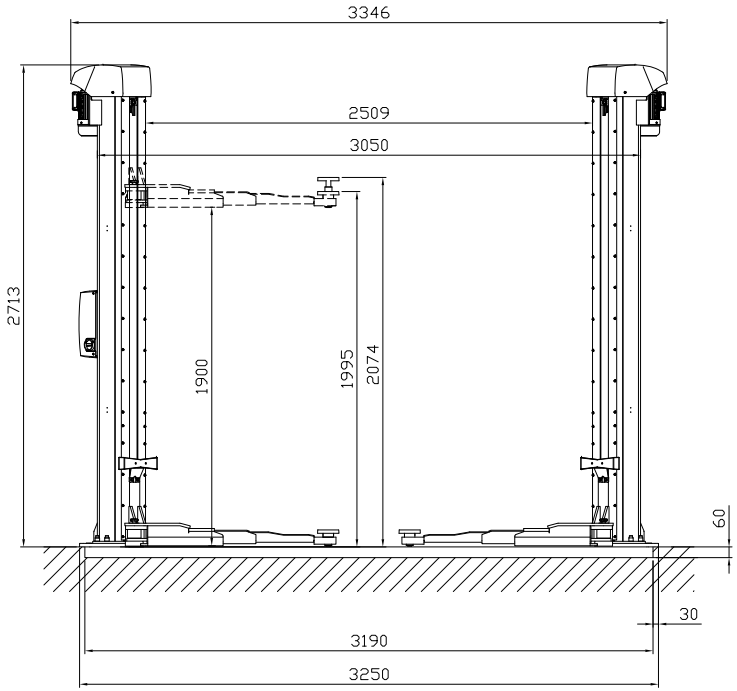

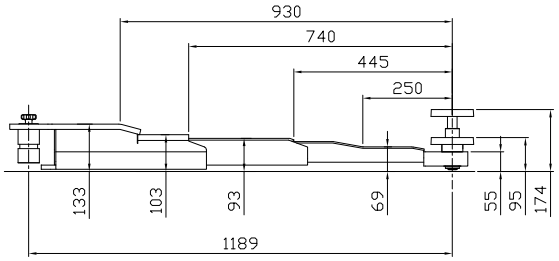

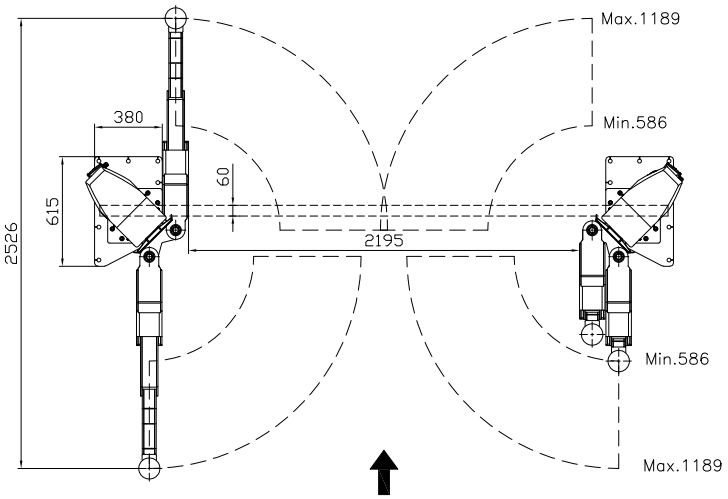

Date: 170124	Sign. LJE	Scale: 1:35	No. T12529
UPLIFTING COMPANY AUTOP STENHOJ			Maestro 2.35 NxT F DT/DT (U) Ø50 Rev. date: