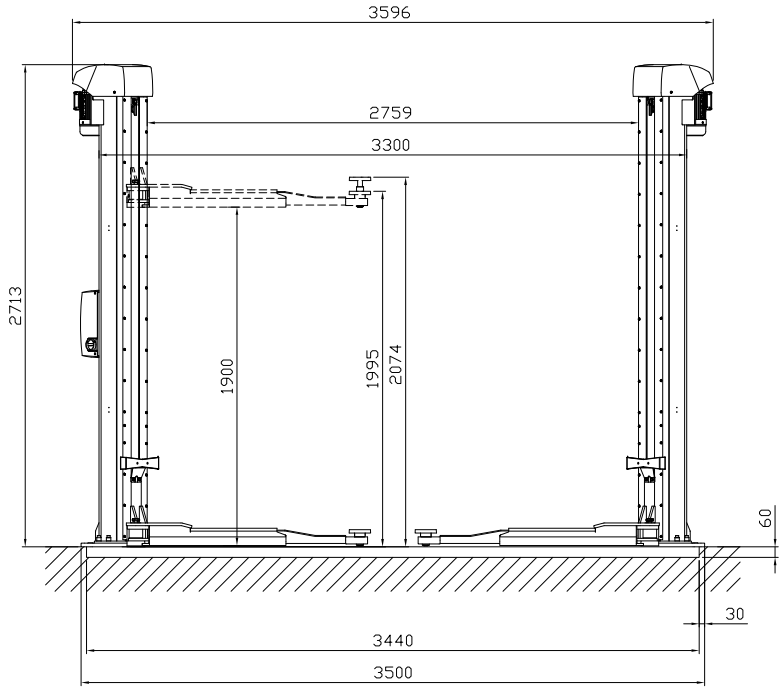

Short arm

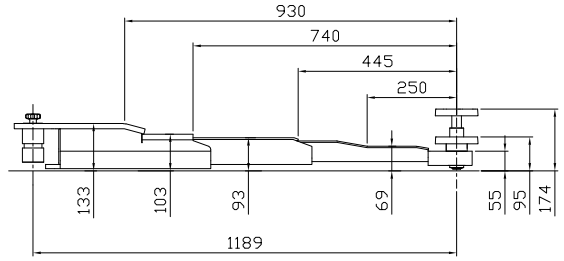

Long arm

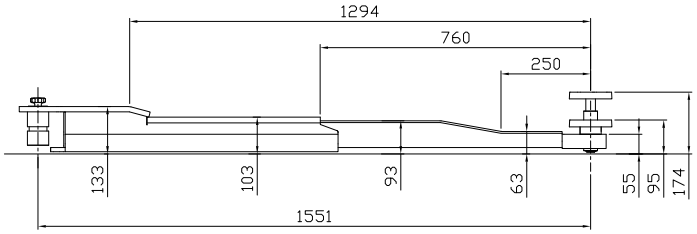

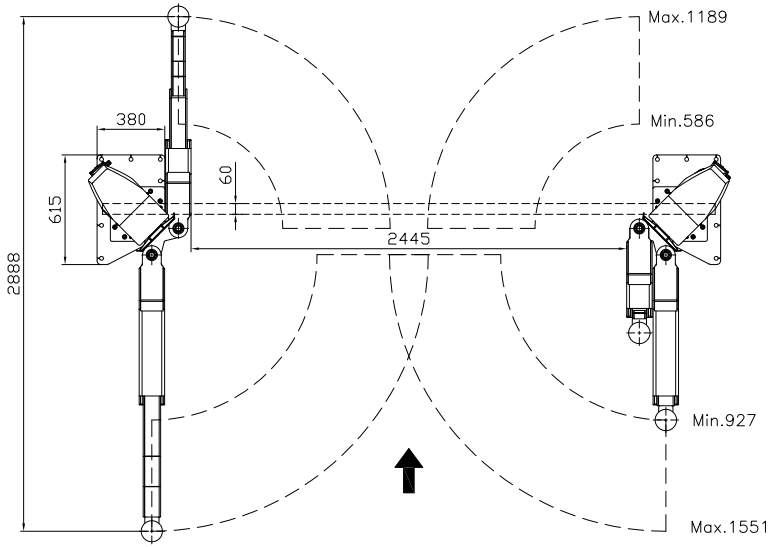

Date: 170124	Sign. LJE	Scale: 1:35	No. T12525

UPLIFTING COMPANY

AUTOP STENHOJ

Maestro 2.35 NxT F
DT/ST (U)
Ø50
Rev. date: